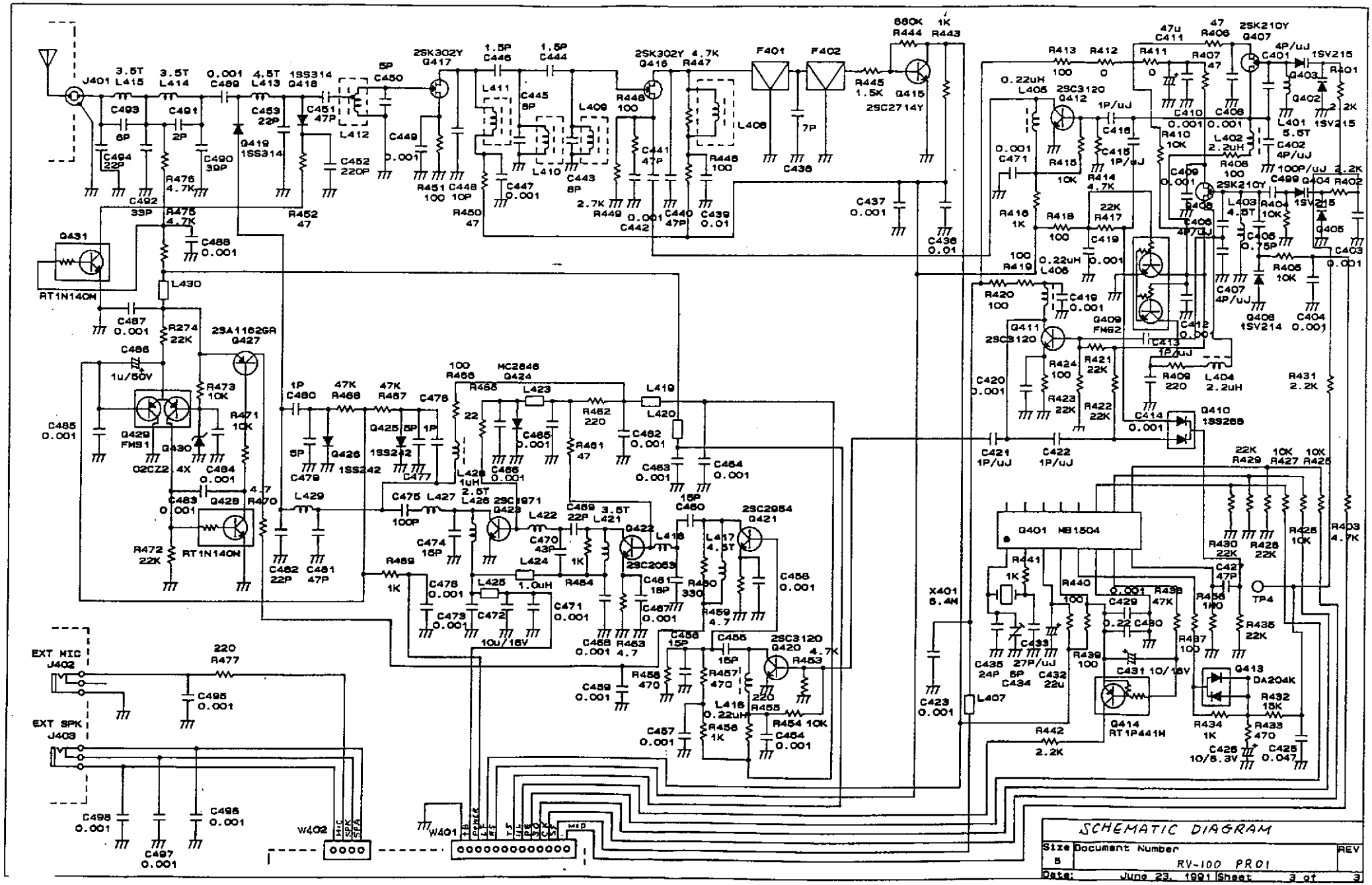
SCHEMATIC DIAGRAM
Size B
Document Number
RV-100 PR01
REV
Date: June 23, 1991
Sheet 3 of 3
J401
J402
J403
EXT MIC
EXT SPK
Q401 MB1504
Q431 RT1N140M
Q429 FM91
Q427 2SA1162GR
Q428 RT1N140M
Q414 RT1P441M
Q413 DA204K
Q410 1SS268
Q409 FM62
Q411 2SC3120
Q412 2SC3120
Q415 2SC2714Y
Q416 2SK302Y
Q417 2SK302Y
Q407 2SK210Y
Q408 2SK210Y
Q424 MC2846
Q421 2SC2954
Q420 2SC3120
Q422 2SC2053
Q423 2SC1971
X401 5.4M
W401
W402
TP4